ENCODER switch

Multy Fuction
Surface mount Type

MODEL NO.
SM007 Series

Features

Compact with thin profile

An encoder with detents and excellent operating feeling

Applications

Scroll of menu and input for Audio Visual Equipment

Level controls for car audio & navigation system

Portable audio devices, Personal digital assistant.

Main Specifications

	Encoder
Rating	1mA 5V DC
Detent(pulse)	24 detent (12 pulses)
Operating Force	2mN·m
Operating Life	50,000 Cycles

Subsidiary Production Code

Code number	Terminal shape	Guide Boss	Remark	Drawing
SM007	SMT	With	Without Push	1

Packing Specification

Quantity (unit:pcs)	Pitch (unit:mm)	Remark
400	24	Bobbin Size Ø330

No.	3D	Dimension Type	P.C.B pattern dimension
	SM007		
1	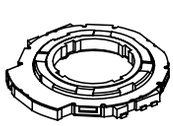	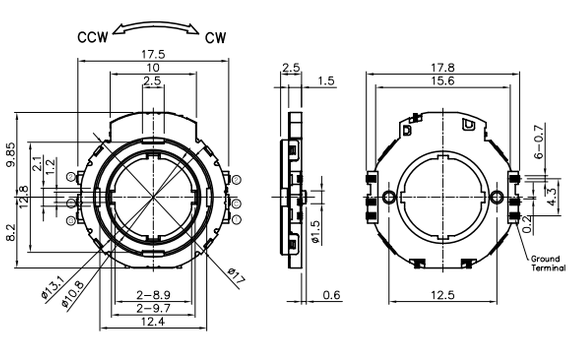	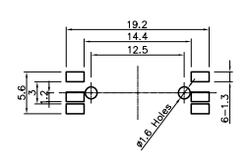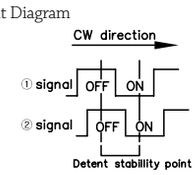 Circuit Diagram