MICRO switch

Snap Action Type
(Spring Plate Type)

MODEL NO.
1283D Series

Features

Superminiature Micro Snap action switch.

Several kinds of lever

Long life cycles.

Applications

Communications and Electronic apparatus.

Gas Ovenrange of household appliances

Car seat-belt, Computer Mouse

Operating signal input switches, etc.

Main Specifications

Rating	0.1A 125V AC
Contact Resistance	100mΩ Max.
Operating temperature	-20℃ ~ 70℃(45% ~ 85% RH)
Operating Force	150gf Max. (Without Lever)
Operating Life	100,000 Cycles

Subsidiary Production Code

Code number	Operating Type	Earth Terminal	Terminal Thickness	Drawing
1283DL□-E	Spring Plate Type	With Earth	0.5	1

Without Earth Terminal : 1283DL□
□: Custom applications are available for the lever specifications. (B / C / K LEVER)

No.	3D	Dimension Type	
		1283DL□-E	
1	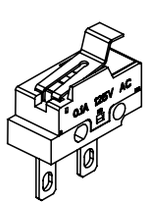	Unit : mm O.P 9.6 ±0.7 F.P 11.5 Max. 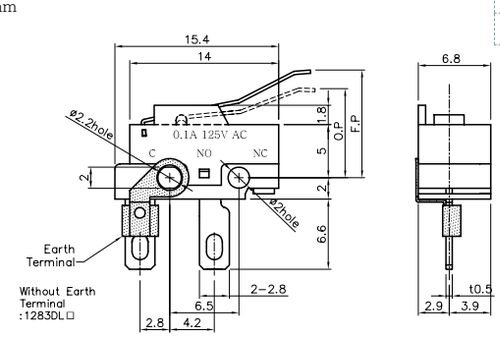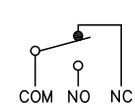	Circuit Diagram