TACT switch

Snap-in & Surface mount Type (4.5 X 4.5 mm)

MODEL NO.
1109 Series

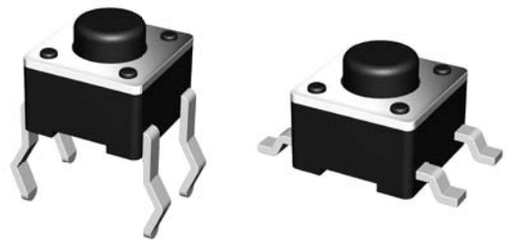

Features

Snap-in & Surface mount type tact switch.

Outline dimension 4.5mm x 4.5mm and 3.8mm or 7.0mm height.

Vertical operating direction.

Applications

Various controls for devices in automotive.

Controls for image/sound devices, radio equipment.

Operating signal input switches, etc.

Main Specifications

Rating	50mA 12V DC	
Travel	0.25±0.1mm	
Contact Resistance	100 mΩ max.	
Operating temperature	-20℃ ~ 70℃(45% ~ 85% RH)	
Bounce	10 m sec max.	
Operating Force	160gf	250gf
Operating Life	50,000 Cycles	30,000 Cycles

Subsidiary Production Code

Code number	Soldering Type	Knob Height (□)	Operating direction	Drawing
1109□	Snap-in	3.8mm= Default 7.0 mm = A	Vertical	1
1109S□	SMT			2
1109W□				3
1109V□	Snap-in	-	Horizontal	4

No.	3D	Dimension Type	P.C.B pattern dimension
1	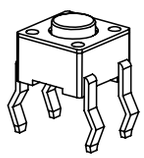	**1109□** Unit : mm 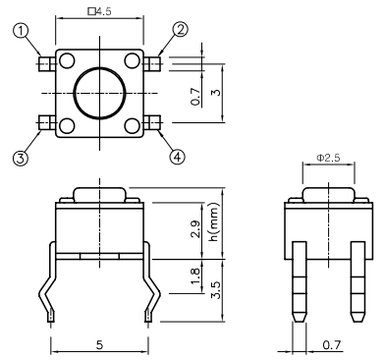 □ h - 3.8 A 7.0	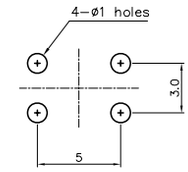 Circuit Diagram 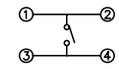
2	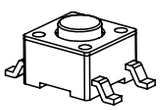	**1109S□** Unit : mm 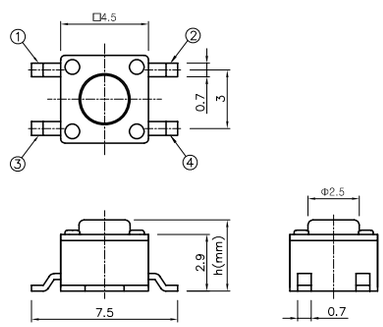 □ h - 3.8 A 7.0	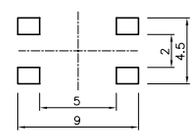 Circuit Diagram 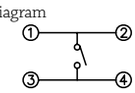
3	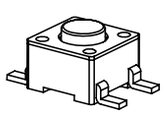	**1109W□** Unit : mm 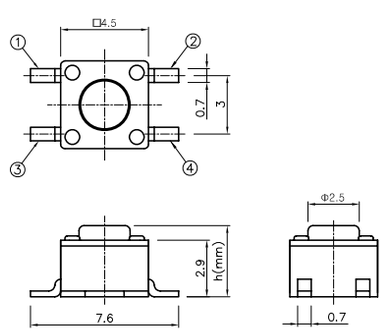 □ h - 3.8 A 7.0	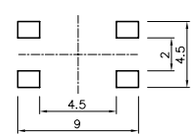 Circuit Diagram 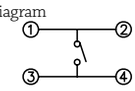
4	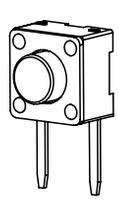	**1109V□** 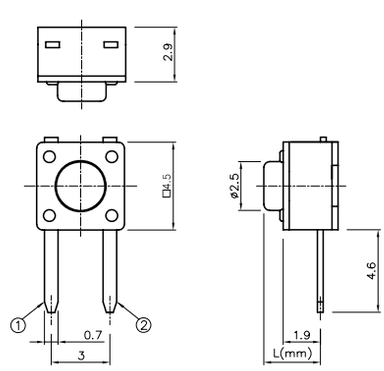 □ L - 2.9 A 6.1	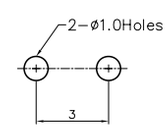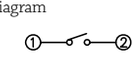 Circuit Diagram